ROLLER BOLT EURO DEAD LOCK
UK-S 008-010 SERIES

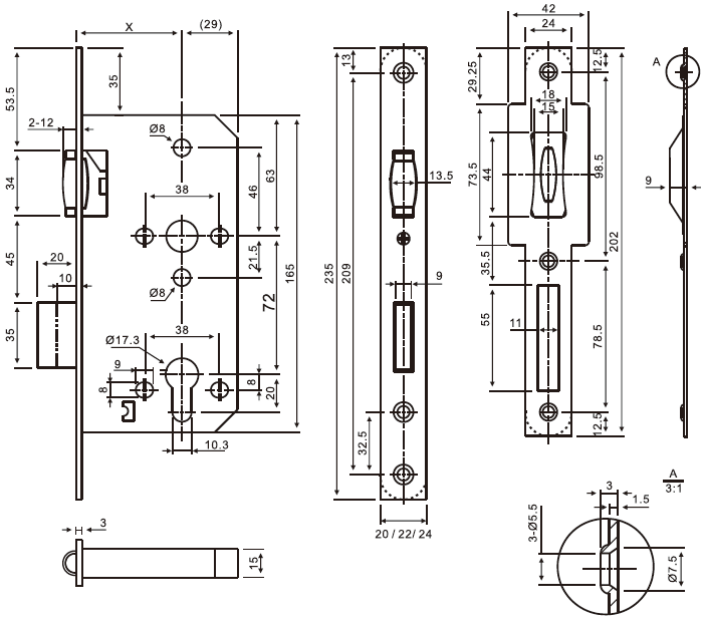

• Dead Bolt	2-turn
• Backset	55mm, 60mm
• Distance	72mm
• Material	Solid SUS 304 Latch bolt & Dead bolt, Follower, SUS 304 Forend, Strike Plate
• Forend & Strike Plate	Square or Radius
• Finish	SSS, PSS, PVD, PB, AB, AC
• Suitable for	Wooden Door, Metal Door, Fire Door, Smoke Door, Interior Door, Outer Door, Swing Door, etc.