NIGHT LATCH UK-S 008-14 SERIES

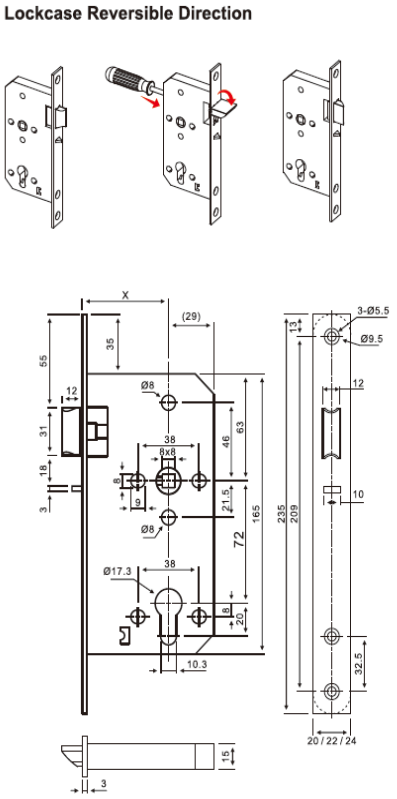

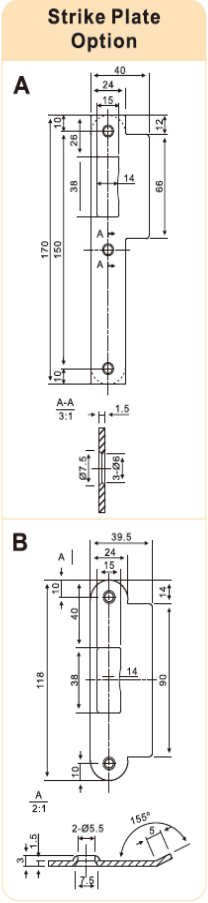

PRODUCT CLASSIFICATION										
3	X	9	1	0	G	2	B	B	2	0

• Certification	CE EN12209 / DIN 18251 Grade 3, 200,000 test cycles, EN1634: 240 Min Fire rated, EN1670: 240 hours Corrosion Resistance.
• CE Classification	3X910G2BB20
• Backset	55mm, 60mm, 65mm
• Distance	72mm
• Material	Solid SUS 304 Latchbolt & Deadbolt, Follower, SUS 304 Forend, Strike Plate.
• Forend & Strike Plate	Square or Radius
• Finish	SSS, PSS, PVD, PB, AB, AC
• Application	Escape door of commercial application.
• Suitable for	Wooden Door, Metal Door, Fire Door, Smoke Door, Interior Door, Outer Door, Swing Door, etc.

Model No.	Backset (mm)	C to C distance (mm)
UK-S 008-145572	55mm	72
UK-S 008-146072	60mm	72
UK-S 008-146572	65mm	72